ace baby™ furniture

Mobile Double Sided Bookcase

Assembly Instructions

Model No:

MBEGR1058
MBEWT1059

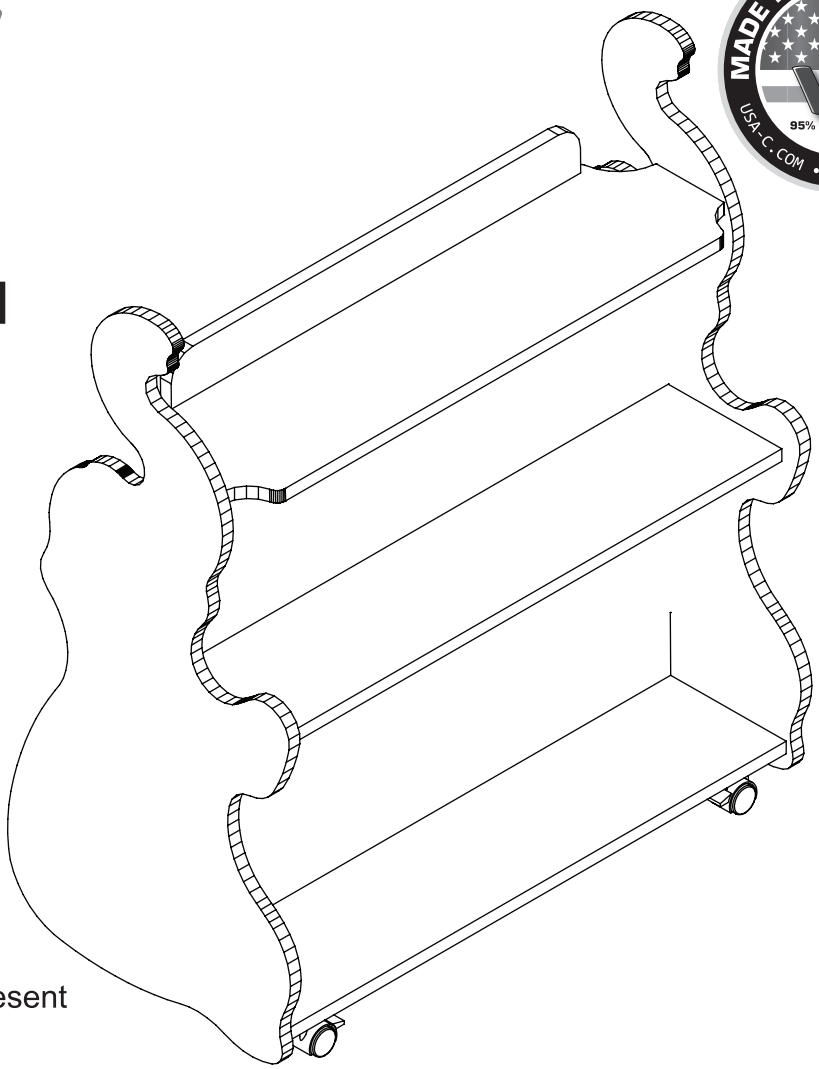

For ages 1 and up.
Adult assembly required.

⚠ WARNING

Small parts and sharp points may be present prior to assembly.

One Year Limited Warranty

We will replace any missing parts at the time of purchase or any defective item within a one year period from the date of original purchase. Please keep your receipt so that we may process your warranty request. This warranty only covers new units with original packaging and ownership, and is not transferable. It does not cover any used, secondhand or demo models.

This warranty does not cover any damaged or defective parts that result from installation and assembly, normal wear and tear, abuse, negligence, improper use or alteration to the finish, design, and hardware. The specific legal rights of this warranty may vary from state to state. Some states do not allow any exclusion or limitation of incidental damages. Some states do not allow limitation on how long an implied warranty lasts.

Composition and Materials

Panolam panels consist of a melamine resin impregnated decorative paper, thermally fused to an industrial grade of particleboard. Thermal fusion takes place under heat and pressure and permanently bonds the resin impregnated paper to the substrate. The process of thermal fusion produces a permanent bond between the melamine surface and the substrate. Panels are supplied with decorative faces on both sides.

Maintenance

Panels can be easily cleaned with warm water and mild soaps. Do not use cleansers which contain abrasives, acids or alkalis.

Safety

Never allow children to climb or hang on the rod, drawers, doors, or shelves.

Formaldehyde Emission Test Data

Panolam panels are produced with particleboard conforming to the formaldehyde emission requirements for particleboard of the U.S. Department of Housing and Urban Development (HUD) and the CPA Voluntary Formaldehyde Emission Monitoring Program. Under 24 CFR 3280 Manufactured Home Construction and Safety Standards, formaldehyde emission must be less than 0.3 ppm for particleboard tested in accordance with FTM-2, the NPA/HPMA Large Scale Chamber Test. Panolam decorative panels, tested in-house in accordance with FTM-2, show formaldehyde emission less than 0.3 ppm.

All products made of Low VOC Materials.

Thank you for supporting U.S.A. - made products.

Please share your comments on our website!

Like Us on Facebook!

facebook.com/AceBabyFurniture

Instruction Manual is available on www.acebabyfurniture.com

Ace Baby Furniture
U.S. Mail: 13290 Paxton St. Suite #A
Pacoima, CA 91331 U.S.A
Toll Free: (888) 518-7111
Fax: (818) 899-2097
Website: www.acebabyfurniture.com
Email: info@acebabyfurniture.com

Customer Support:
Toll Free (888) 518-7111

Parts

- Ⓐ Right Panel
- Ⓑ Left Panel
- Ⓒ Upper Panel
- Ⓓ Upper Shelf
- Ⓔ Upper Center Panel
- Ⓕ Lower Shelf
- Ⓖ Lower Center Panel
- Ⓗ Bottom Panel

Hardware

❶ Connector Bolt 5mm (x12)

❷ Screws 16mm (x16)

❸ Casters (x4)

❹ Phillips Hex (x1)

❺ Screws 50mm x4

Note: Extra hardware may be included for your convenience.

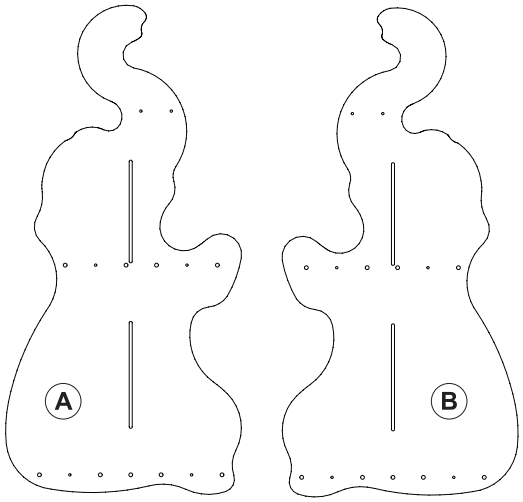

Missing Hardware? Call (888) 518-7111
No Additional Tools Are Required for Assembly!

We include a Phillips Screwdriver for your convenience!

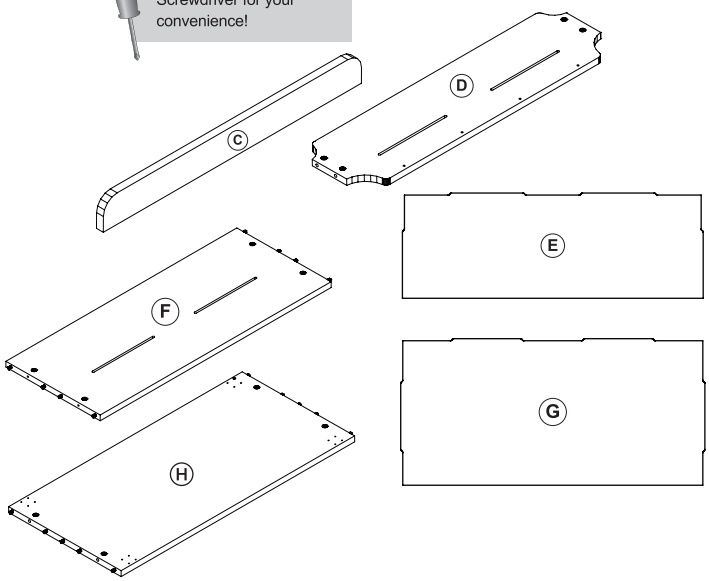

1 Assemble Side Panels

❶ Connector Bolt 5mm (x12)

Note: Use included Philips Screwdriver to fasten the connector bolts

WARNING! Do not use power tools to tighten the connector bolts

Note: Repeat the same step on part Ⓑ

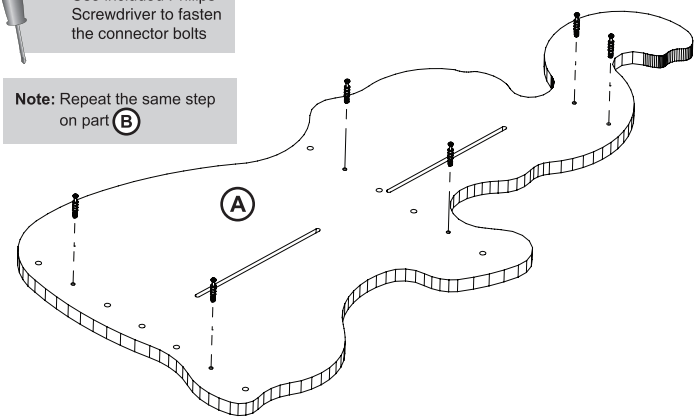

2 Attach Casters

Note: Use included Phillips Screwdriver to fasten caster screws to panel

❷ Screws 16mm (x16)

❸ Casters (x4)

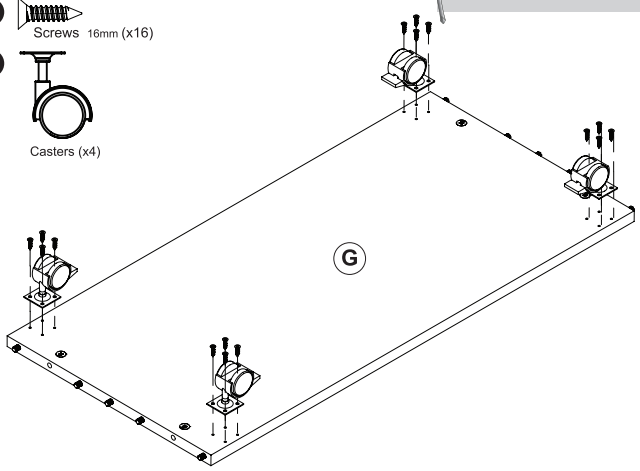

3 Assemble Upper Panel

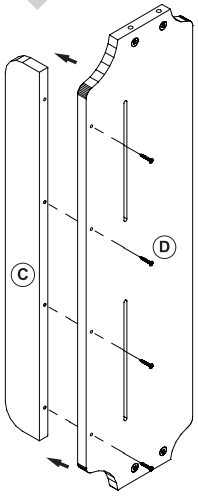

Note: Use ❺ screws to attached upper panel

4 Assemble Upper Shelf

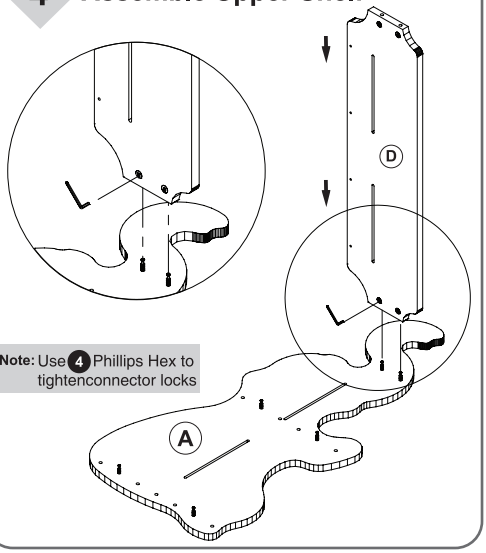

Note: Use ❹ Phillips Hex to tightenconnector locks

5 Assemble Upper Center Panel

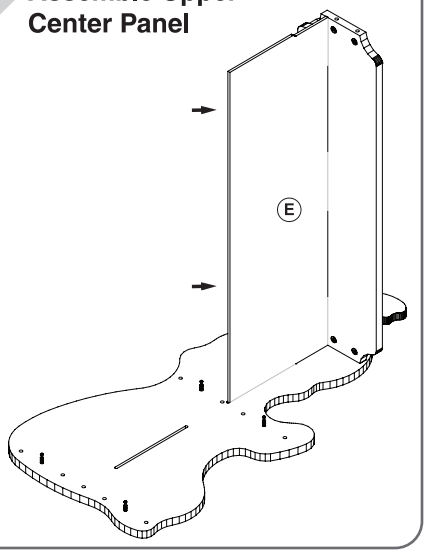

6 Assemble Lower Shelf

Note: Use 4 Phillips Hex to tighten connector locks

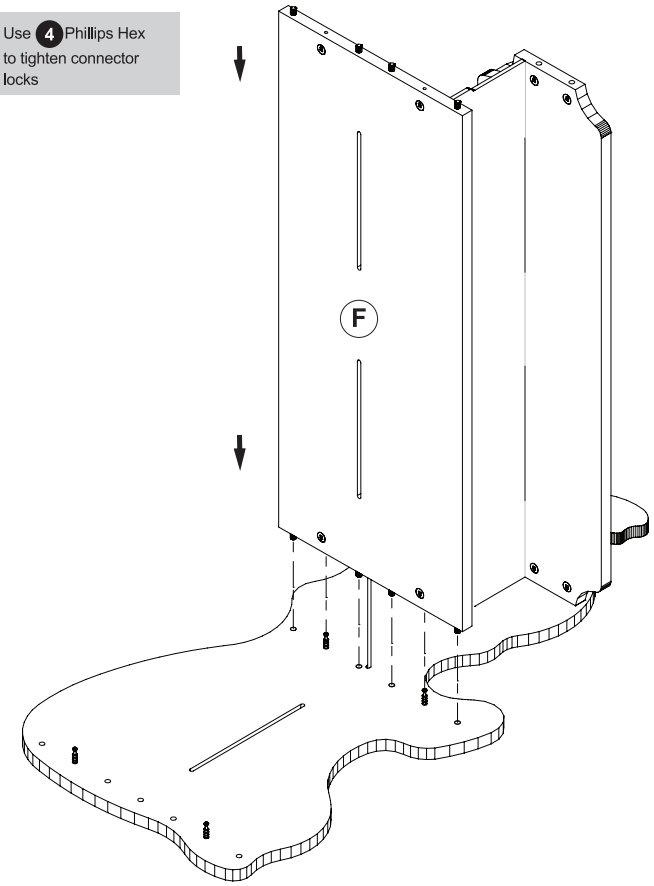

7 Assemble Lower Center Panel

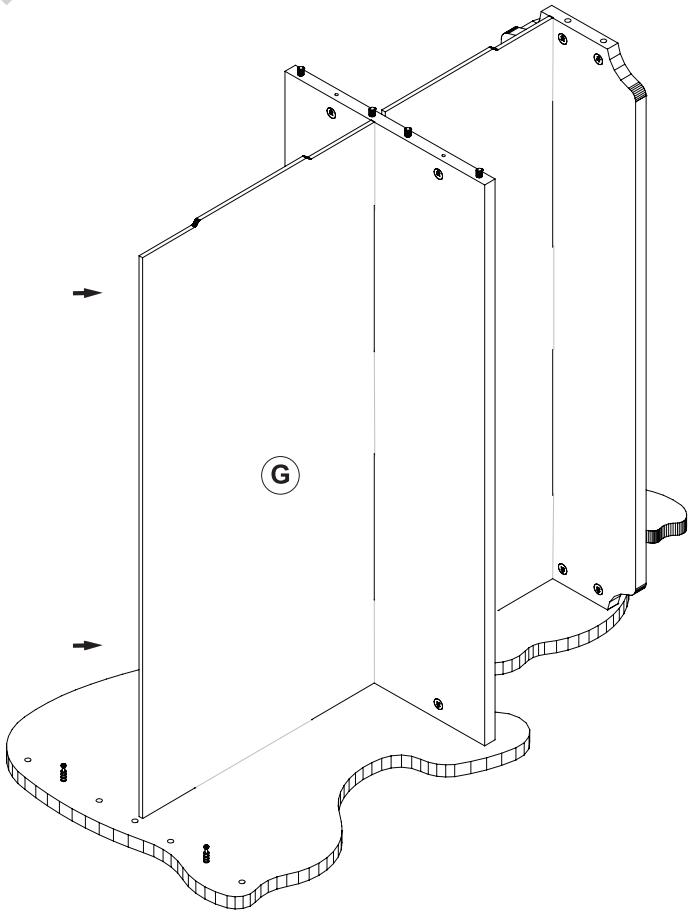

8 Assemble Bottom Panel

Note: Use 4 Phillips Hex to tighten connector locks

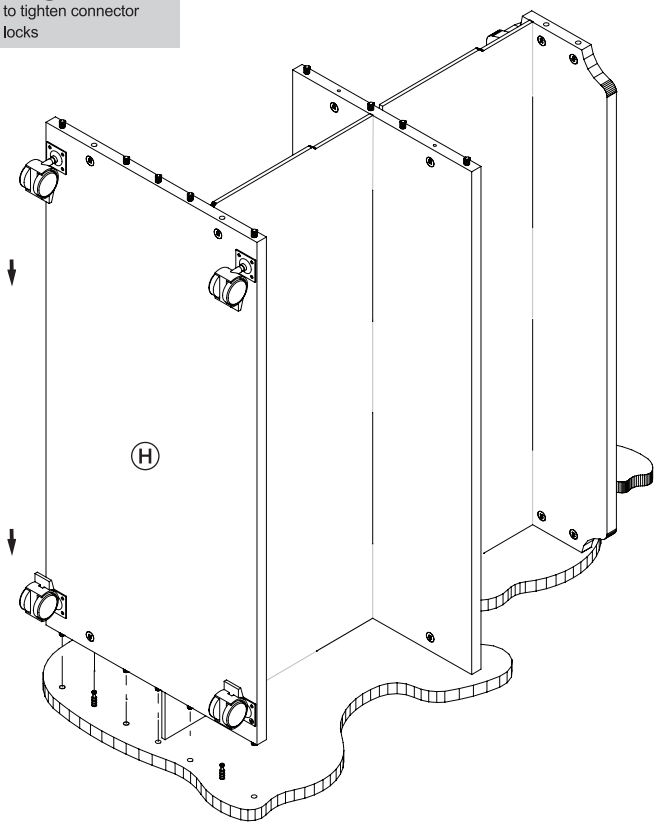

9 Assemble Side Panel

Note: Tighten 2 connector locks outside & 2 connector locks under lower & upper shelves

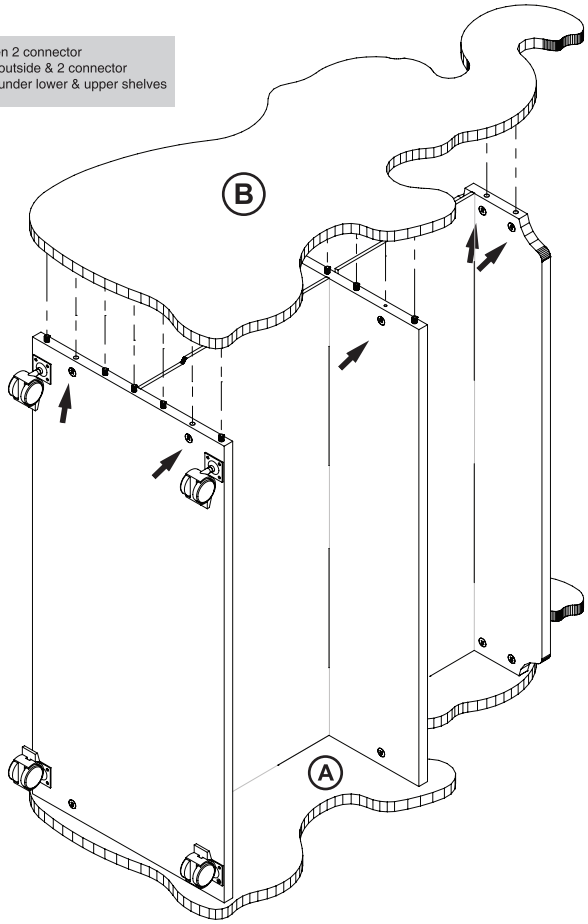

Complement Your Bookcase Perfectly in Matching Shapes and Colors

Mobile Dress-Up Closet

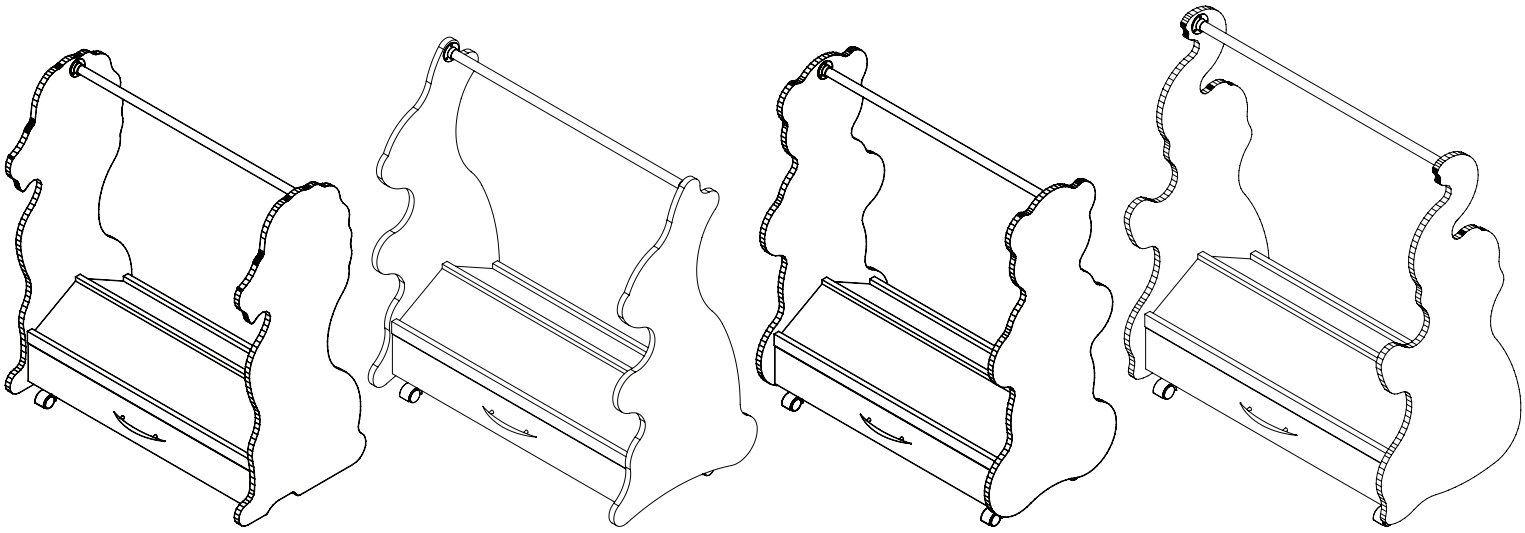

- Made of Sturdy and High Quality Melamine Panels
- Wardrobe Drawer with Full Extension Soft Closing Slides
- Angled Shoe Racks on Both Sides
- Easy Gliding Casters for Mobility
- Designed and Manufactured in the U.S.A.

---

ace baby™ furniture

www.facebook.com/AceBabyFurniture **www.acebabyfurniture.com**